GPIO Description

GPIO Description
- 1. GPIO Numbering
- 2. GPIO Pins
  - 2.1 GPIO.BOARD Mode
  - 2.2 GPIO.BCM Mode
- 3. Other Pins

The Jetson.GPIO library for Jetson motherboards allows developers to interact with external hardware devices via 40-pin GPIO pins.

1. GPIO Numbering

The Jetson.GPIO library supports two common numbering modes: BOARD and BCM.

Note: This tutorial only demonstrates GPIO.BOARD mode.

Mode	Numbering Method
GPIO.BOARD	Based on physical pin numbering (1-40)
GPIO.BCM	Based on Broadcom chip GPIO logic numbering

2. GPIO Pins

2.1 GPIO.BOARD Mode

One-to-one correspondence between BOARD mode pins and the 40-pin pins on the motherboard:

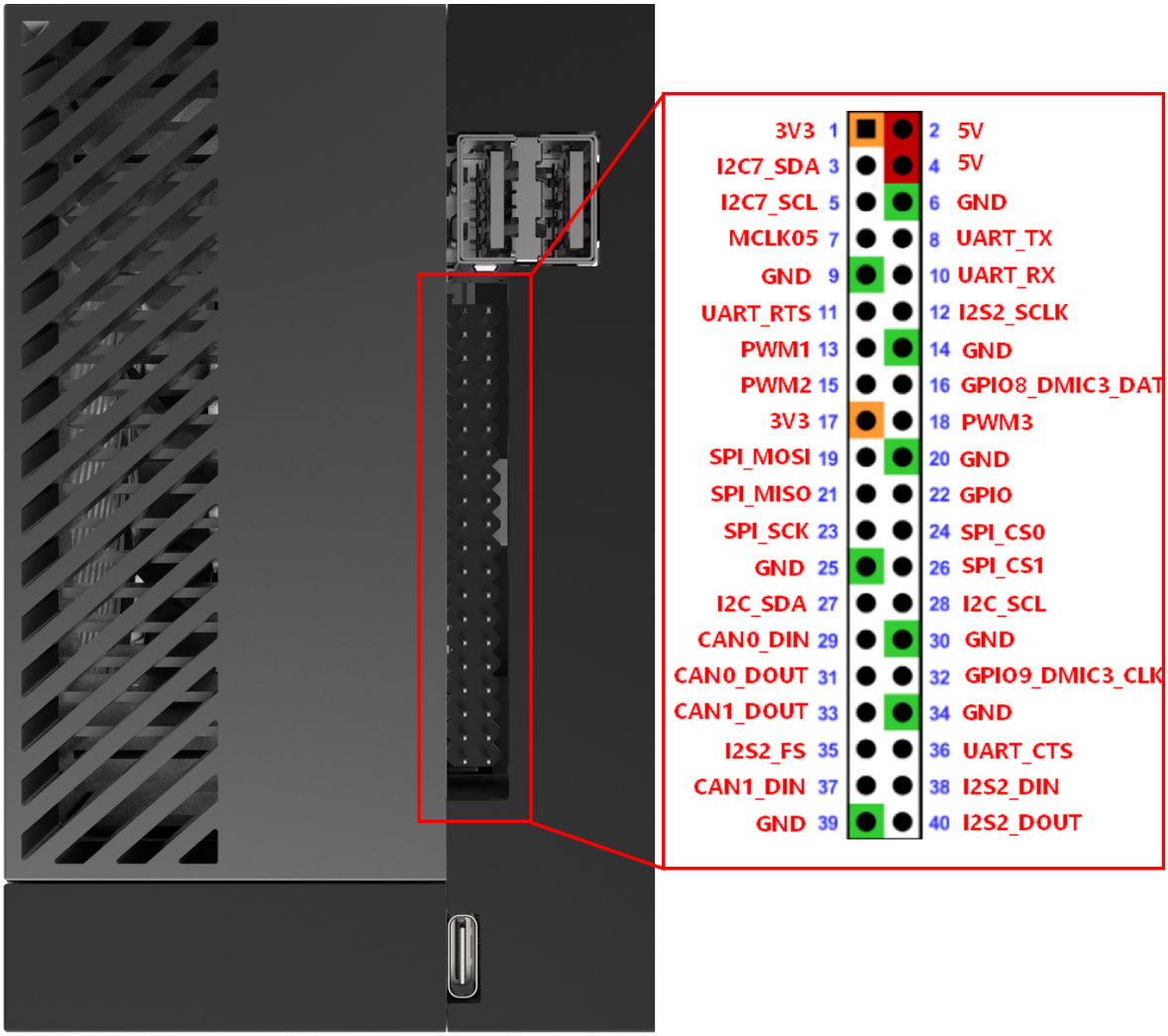

2.2 GPIO.BCM Mode

Pin correspondence between BCM mode and the 40-pin connector on the motherboard:

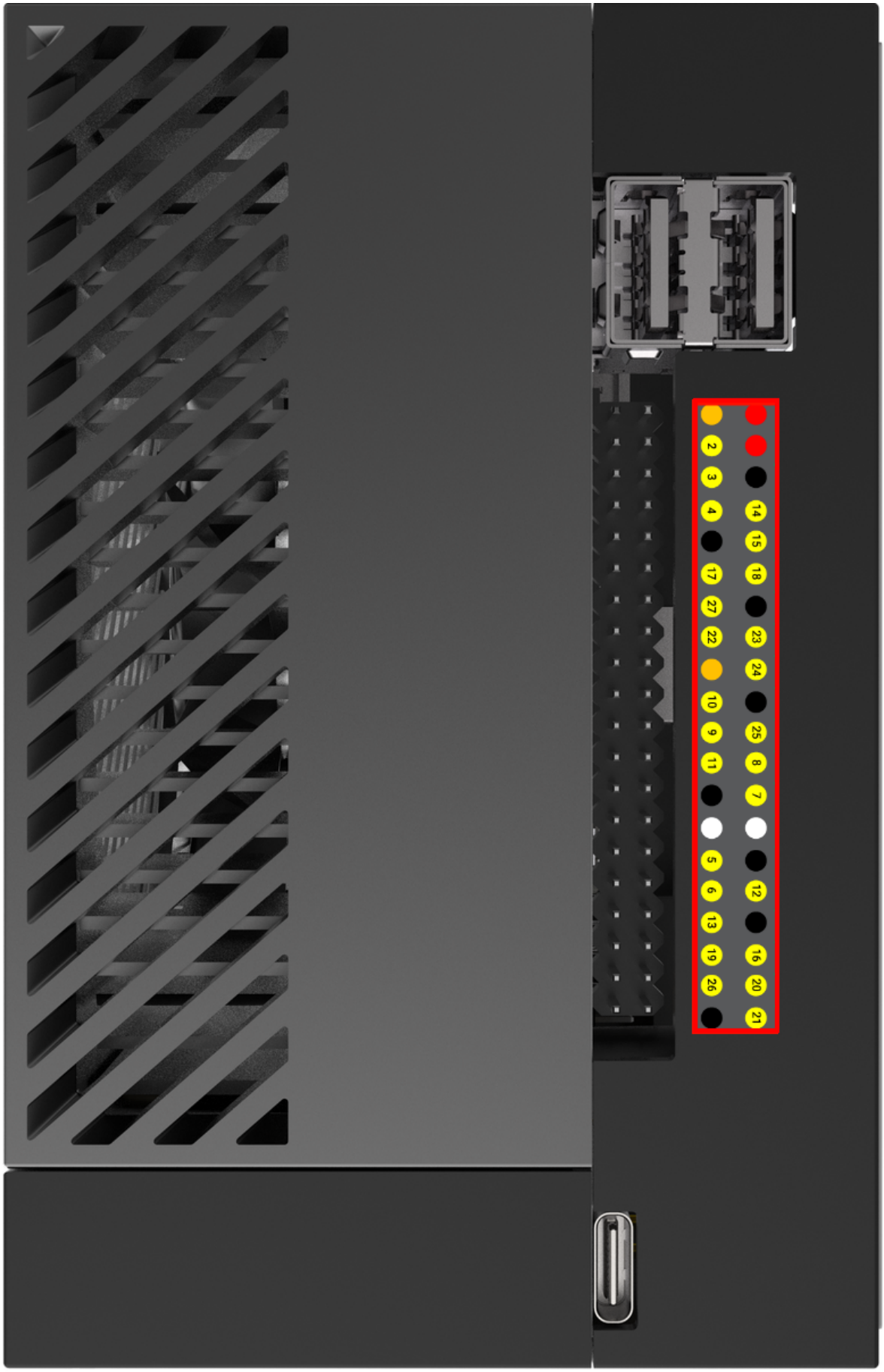

3. Other Pins

AUTOMOATION-12-pin control instructions:

Short-circuiting pins 5 and 6 automatically powers on; disconnecting them requires pressing the power button to power on.
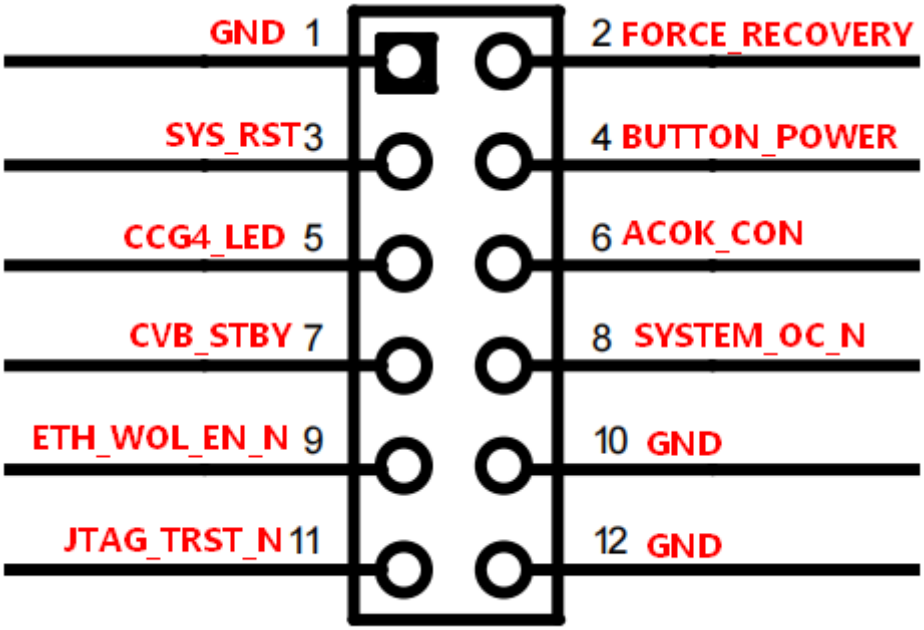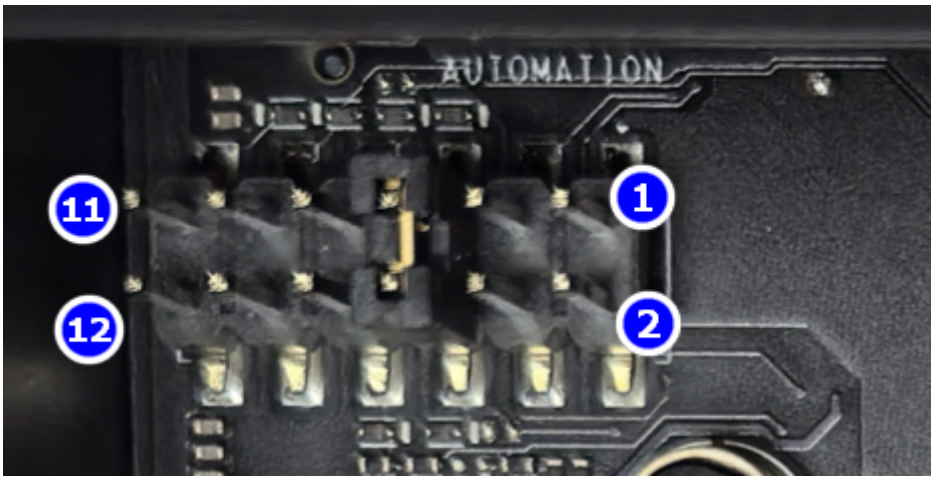
Short-circuiting pins 9 and 10 enables WOL (Wake-up on Network); disconnecting them disables WOL.